SOLVENT RECOVERY SYSTEM

SIDEWINDER

MODEL M-2

Refrigeration Machine Distiller-Reclaimer

Single Button Operation

1  **LOAD**

2  **LATCH**

3  **PUSH**



You're Done!

You'll have crystal clean solvent when the machine automatically turns off. Use the same solvents over and over for pennies.

Made in the

UL LISTED

Recycling-it's about savings.

Recycling of Hazardous Waste Benefits All

People Buy or Lease a Sidewinder Model M-2 for Four Reasons:

- To save money on solvent purchases.
- To save money on waste disposal costs.
- To conform with regulations and avoid potential costly fines.
- To do their part to save the planet.

Hazardous Waste

All used solvents, thinners and reducers are hazardous wastes. There are only two legal ways to dispose of these hazardous wastes:

1. For less than 100 kilograms of waste per month, obtain an EPA identification number as a small quantity generator and pay a registered transporter to haul the waste to an approved recycling facility or other type of approved facility ... or

2. Recycle the used solvent on site for future reuse.

Hazardous waste generators have a "cradle to grave" responsibility for safe disposal of hazardous wastes. Federal law says the generator is responsible for the waste he creates, regardless of who hauls it away or where it is stored. His name is on the barrel and if it is spilled or otherwise causes pollution, he is responsible for the cleanup. Forever!

Of course to dispose of hazardous wastes in any unlawful way is just foolhardy and a good way to risk heavy cleanup costs, stiff fines and possible jail time.

The Sidewinder Concept

The Sidewinder Model M-2 is manufactured by Persyst Enterprises, Inc. in Las Vegas, Nevada. The market we satisfy is the 5 to 70 gallon per week solvent (thinners, etc.) user that must meet EPA requirements for waste minimization. General user classifications are:

1. Commercial paint and finish contractors.

2. Industrial and government paint, finish and coatings users.

3. Automotive paint and finish users.

Recycling and waste minimization is one of the few areas where national environmental goals, industries economic interests and public health and safety issues clearly coincide. For waste generators, the benefits include reduced costs, liabilities, and regulatory burdens associated with hazardous waste management. For the general public, waste minimization pays off in our improved environment.

Our nation has interests in minimizing the overall amounts of hazardous waste being transported on our highways and stored at hazardous waste sites. The EPA tailors rules and regulations to encourage on site recycling and reuse.

The Sidewinder Model M-2 reduces the volume of hazardous materials on site and all but eliminates the need to transport liquid hazardous waste on our streets and highways.

The Sidewinder Method

The Sidewinder Model M-2 is a Refrigeration Machine Distiller-Reclaimer, it processes 5 gallons or less per batch. A standard 5 gallon metal bucket of waste is placed in the chamber. Waste solvents are vaporized and re-condensed, making the solvent reusable. The vapors expand in the chamber, displacing air. The vapors, being heavier than air, then fall through a refrigerated heat exchanger, condense and gravity flow out into the clean solvent receiving vessel. The waste stays behind in the cooking bucket within the chamber.

The vaporizing chamber is built to pressure cooker specifications. Although the unit operates at atmospheric pressure a safety pressure relief valve is installed in the lid. Metal to metal machined surfaces seal the chamber and its' lid, which is held fast during processing with 6 bakelite wing nut assemblies.

The vapor tubes and the outlet tubes are of TFE Teflon®. The evaporator (condensing chamber) is stainless steel. The lightweight aluminum stand is provided with floor mount capabilities. The Sidewinder Model M-2 is covered by a one year limited warranty.

The use of a refrigeration condensing system instead of a forced air or water cooled system is a more resourceful choice, especially where water conservation is important. Additionally, special plumbing, water treatment and freezing weather considerations are unnecessary. Water condensing systems can use water at about 180 gallons of water per 1 gallon of recycled solvent. Forced air condensing systems, simply are not efficient in warmer climates.

The Sidewinder Model M-2 is for use in commercial and industrial applications only by trained personnel. Strict adherence to cautious handling of hazardous materials must be maintained always. For location, wiring, and operating instructions, refer to the owners manual.

Pitfalls To Avoid

As with most products, there are some pitfalls to avoid. Only knowledgeable persons should be allowed to operate the Sidewinder Model M-2.

- Never process unidentified compounds.
- Avoid the processing of wastes containing acids.
- Do not process wastes containing Nitrocellulose or Cellulose Nitrate (found in many lacquers and inks) or other reactive materials under any circumstance.
- Know what you are processing and check material safety data sheets for the waste contaminants as well as for the solvent to be recycled for compatibility before processing.

Electrical

Because of the small batch size, the rate of processing, air movement through the condensing unit and the heavier than air qualities of the vapors produced, under normal operating conditions, the minimum concentration of gases or vapors necessary to define Class 1, Division 1 area are not present.

The Sidewinder Model M-2 has been investigated for use in normal, non-hazardous locations and Listed by Underwriters Laboratories Inc. as compliant with UL 2208 Standard for Solvent Distillation Units.

The 1997 Uniform Fire Code, Volume 1, 10th Edition, Article 79 section 7903.4, states:

7903.41 General. Solvent distillation units used to recycle Class I, II or III-A liquids having a distillation chamber capacity of 60 gallons (227.1L) or less shall be listed, labeled and installed in accordance with Table 7903.4 and nationally recognized standards. See Article 90, standard u.1.17.

ARTICLE 90 - STANDARDS

u.1. UNDERWRITERS LABORATORIES INC.
333 Pfingsten Road, Northbrook IL 60062
UL STANDARDS

u.1.17. UL 2208 Standard for Solvent Distillation Units

The process is continuously monitored by an electronic logic printed circuit board. Automatic shut down is commenced in the unlikely event of an over heat situation. These safeguards not only shut off the unit, but disable it until a service representative can evaluate the problem and help with repairs.

Easy To Operate

1



LOAD

Your used solvent. We recommend loading your used solvent in a bucket outside of the Sidewinder - to avoid any spillage.



2



LATCH

Metal to metal machined surfaces seal the chamber and its' lid, which is held fast during processing with 6 bakelite wing nut assemblies.

3



PUSH

The On button which will illuminate red when the machine is processing solvents. Different variables determine the amount of processing time.

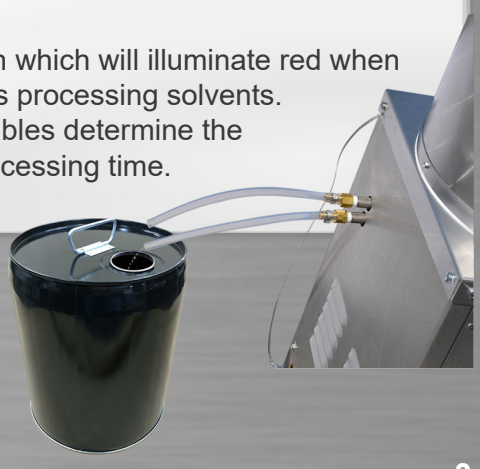

360° VIEWS

SOLVENT RECOVERY SYSTEM SIDEWINDER MODEL M-2

FRONT VIEW



POT COVER LID
Unique lid design prevents vapors from escaping and eliminates the need for costly gaskets.

VAPORIZING CHAMBER
Built to pressure cooker specifications.

POWER LIGHT
Red light indicates when machine is plugged in.

LIGHTWEIGHT ALUMINUM STAND
Designed to mount to the floor.

BAKELITE HANDLE

BAKELITE WING KNOB
Durable and made to withstand high temperatures.

GUTTER
Protects the control panel from spillage.

READY LIGHT
Green light indicates when solvent has been fully processed & when you can remove the lid & load in your next batch.

ON / OFF BUTTON
The red switch will be illuminated when the machine is working on processing solvents.

MOUNTING HOLES
Select a well ventilated location out of direct sunlight, under cover and away from any other source of heat, then you can safely attach to the floor.

SIDE 2 - ACCESS PANEL



LOUVERS
Allows for proper ventilation.

ACCESS PANEL
This is the side to open to get to internal parts.

SERIAL NUMBER
Provide to customer service when calling in.

UL LISTED
Compliant with UL 2208 Standard for Solvent Distillation Units, for use in a normal location.

SIDE 3 - Outlet Tubes



EXTERNAL SAFETY GROUND STRAP
Helps ground the unit to solvent.

SOLVENT OUTLET TUBES
Made of TFE Teflon®, clean solvent pours out, be sure to put a bucket here to catch all of your savings.

BACK VIEW - Junction Box



VAPORIZING CHAMBER ACCESS PANEL
Access for high temp monitoring sensors.

MULTI-PORT CERTIFIED JUNCTION BOX
Protects wires from exposure.

CONDENSING FINS
Be sure that debris is not allowed to restrict air flow.

360° SIDEWINDER SOLVENT RECOVERY SYSTEM MODEL M-2 VIEWS

Features

UL LISTED
The Sidewinder Model M-2 is the first (as of 11/04/97 the only) UL Listed Solvent Recycler in the world.

MEETS UL 2208
UL 2208, Standard for Solvent Distillation Units is the US National Standard. Sidewinder Model M-2 is certified by UL to meet the requirements of UL 2208.

CURRENT CODES
1997 Uniform Fire Code requires that a Solvent Recycler be listed by a nationally recognized third party testing agency and that it be certified by the testing agency to meet the requirements of UL 2208 Standard for Solvent Distillation Units.

COMPLIES WITH UL 2208 FOR USE IN ORDINARY NON-HAZARDOUS LOCATIONS
According to the Standard and Codes, a Solvent Distallation Unit complies for use in non-hazardous areas or it doesn't and must be put in either an Class I, Division 2 or Class I, Division 1 hazardous location. The Sidewinder Model M-2 complies for use in non-hazardous locations.

NO EXPENSIVE SEALS OR GASKETS TO REPLACE
Sidewinder design doesn't require the $100.00 to $300.00 annual expense for replacement seals, orings or gaskets.

HASSLE FREE
It couldn't be more simple. Load the unit with dirty solvent, 5 gallon bucket and all. Replace the lid. Press the button.

SINGLE BUTTON OPERATION
What more can we say?

RELIABLE
Follow the simple maintenance routine, for years of trouble free operation. We have many units in the field having completed their twentieth year and more.

EFFICIENT REFRIGERATION CONDENSED
We're the only one we know of that uses refrigeration to condense. The alternatives are: forced air - not totally efficient in warm climates or water cooled - wastes lots of water, messy and special consideration must be given to plumbing, water storage, water treatment and waste water disposal.

OZONE SAFE HFC-134a REFRIGERANT
Big brother made us do it, but it turned out for the best. We were able to get a larger horsepower unit to fit the same R-12 frame and it is more efficient than the old method.

SELF MONITORING
Sidewinder regulates temperature, engages condensing system, oversees built in safety failsafes, initiates cool down and shuts off. All automatic.

AUTO SHUTDOWN
You go about your business... Sidewinder knows when to shut off, even if you've given it your worst case mess. Solvents only, please - no water or water base.

PROCESSING BAGS OPTIONAL
We personally like the convenience of Sidewinder processing bags but they are optional.

110-120 VOLTS
Easy to find a home, no special 240 volt wiring.

NO WATER HOOKUPS
This goes back to Hassle Free. Water cooled units - waste lots of water, are messy and special consideration must be given to plumbing, water storage, water treatment and waste water disposal.

MICRO CONTROL LOGIC
This time tested, rugged circuitry makes the operation simple.

SAFETY FAILSAFE & SHUTDOWNS
If something is unusual the control simply shuts it down.

MADE IN USA
It's where we live, work, and play.

FULL 1 YEAR LIMITED WARRANTY

Sidewinder M-2 Specs

Width	16 inches
Depth	16 inches
Height	44 inches
Net Weight	110 lbs.
Voltage	110/120VAC
Current	11 amps
Heater	1050 Watts
Condensing System	Refrigeration
Evap Temp Rate	Low
Refrigerant	Ozone Safe HFC-134a 0.16kg
Evap Temp Range	0°F to +15°F
Cap Tube	96” x .042” ID
Operating Pressure	Atmosphere
Warmup Time	Approx. 90 min.
Capacity	5 US Gallons
Electronics	Micro-Linear Logic
Safety Limits	Heating Vessel Evaporator
UL Listed	UL Standard 2208

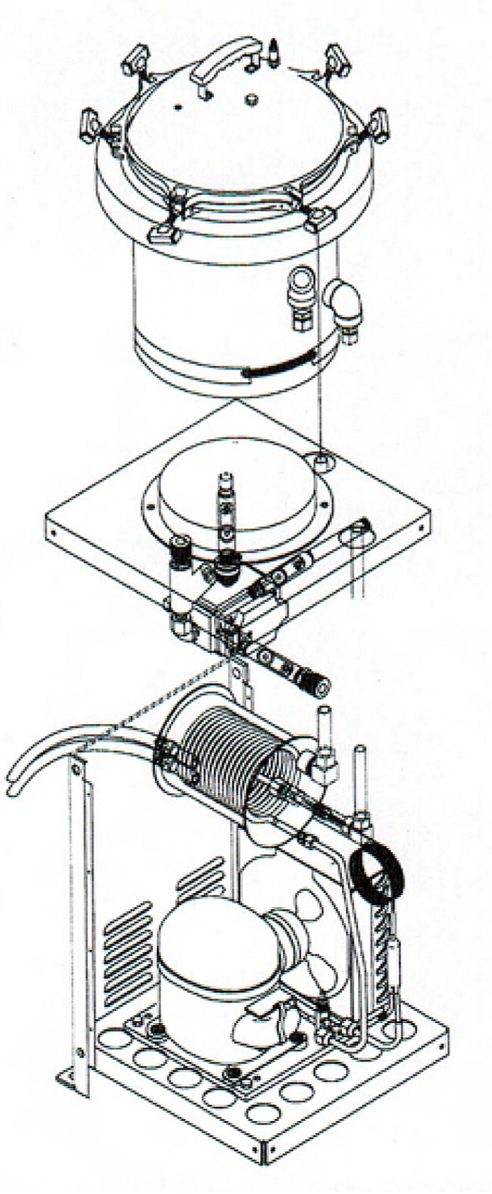

Required Clearances - 16” Ventilation Clearance

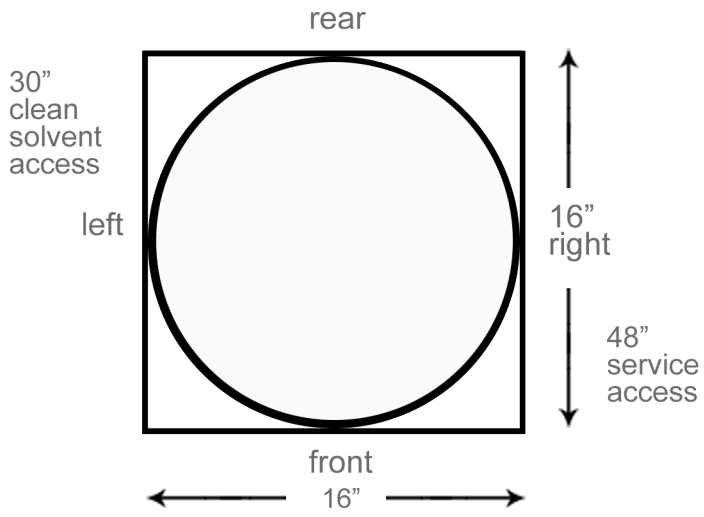

Locate in a level, well ventilated, under cover area. Out of grinding, welding and smoking area.

Recycling of Hazardous Wastes Benefits All!



SOLVENT RECOVERY SYSTEM
SIDEWINDER
MODEL M-2

Manufactured by: Persyst Enterprises Inc.,
4695 Melvin Street, Las Vegas, Nevada 89115
Phone: (702) 362-9432
Fax: (702) 362-9440
Email: info@solvent-recycler.com
Website: www.solvent-recycler.com